Ichip Mystère
LED Followspot

Ichip Mystere
Made is USA

FEATURES

- Throws from 15-150 feet
- 3:1 zoom range
- Draws less than 7 amps
- 200 Watts
- 6000hr LED Module
- 5,600 Kelvin
- 90 CRI
- Coated Optics
- Steep 70° down tilt and 60° up tilt
- Full 360° horizontal sweep
- Six-color color changer
- Lightweight steel chassis, with aluminum housing and components
- Iris and dowser
- Small, rugged, and compact
- Quiet, cool operation
- 3-position lamp & fan control switch
- Easy to operate and maintainance free
- Black powder coat finish
- Made in USA

APPLICATIONS

- Theaters and rental shops, touring, nightclubs, schools, churches and special applications

DESCRIPTION

An **entirely new** concept in spotlight efficiency, the **Ichip`Mystere** offers cutting edge performance in a lightweight, flexible package. Made in the USA to Phoebus Manufacturing's exacting standards, it features an aluminum housing on a steel chassis, a variable focal length lens system, and a mechanical dowser and iris. Inside the Ichip is a whole new deal. The revolutionary 200 watt multi LED light engine module is clean and super bright with 36 individual micro lenses. Aligned with Ichip's high quality, coated optics, the LED Module delivers unmatched brightness and a beautiful, crisp, even field.

Weighing in at a mere 60lbs (with standard base) and measuring only 28.5" in length, the revolutionary Ichip Mystère sets a new standard for efficiently keylighting a moving performer. At a mid-range 50' in spot mode, it can produce an impressive 4200 Lux of daylight-bright illumination. These are brightness numbers usually associated with arc lamps. Yet the Ichip uses no heavy, expensive ballast and has no high voltage or UV hazards. It will produce a high intensity 5600K beam of flicker free light throughout its long 6000 hour life.

The Ichip Mystère is quiet, energy efficient and cool to the touch, a perfect fit for applications where compact size and flexibility are needed. A full featured theater spotlight, it still fits easily into the trunk or backseat of a car, making it ideal for rental shops, touring, school, church or community groups.

OPTIONS

- Available for 220 volt 50/60hz operation
- Lightweight collapsible motion picture style stand
- Heavy Duty Collapsible Stand

ichip mystère

Strong Lighting

10533 Chandler Road, Suite 101
La Vista, NE 68128
Tel. 402-506-9096
www.strong.lighting

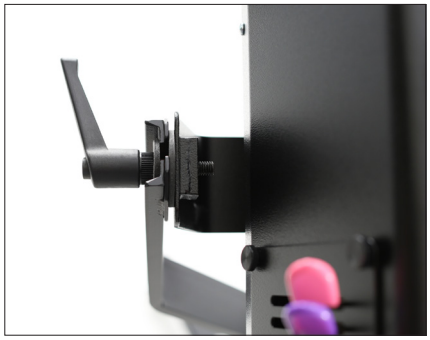

Improved bearing and yoke brake for smoother operation

Coated Optics throughout for high brightness and true color rendition.

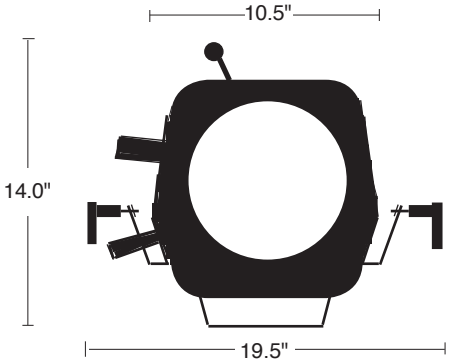

Four separate carry handles for optimum handling ease. Shown with Heavy Duty collapsible base.

Lightweight motion picture style collapsible base available as an option.

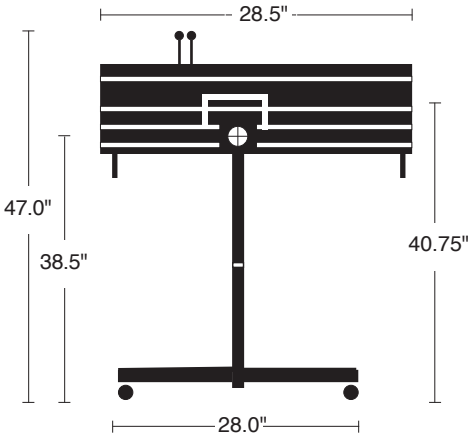

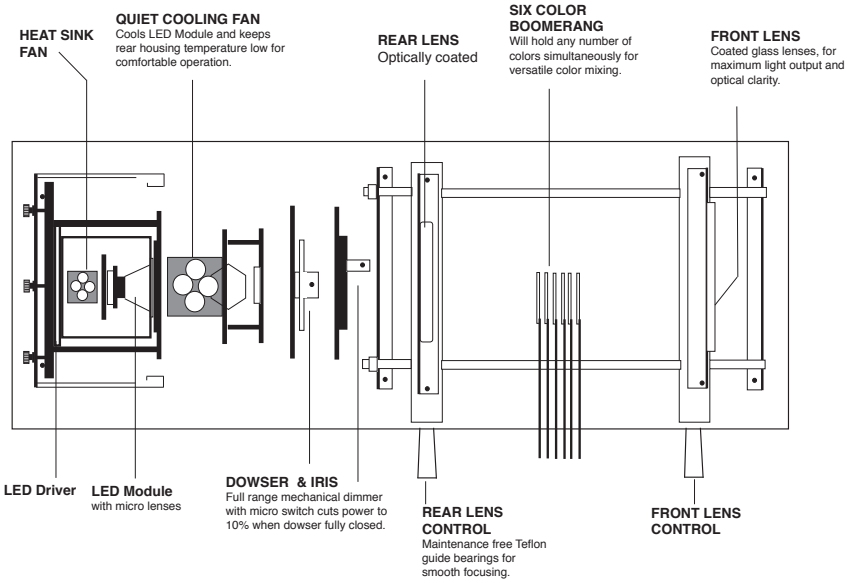

SPECIFICATIONS

Overall Length	28.5"
Overall Width at Base	28.0"
Overall Height	47.0"
Height of Pivot Point	38.5"
Floor to Beam Center	41.5"
Front Clearance Radius for:	
Vertical Movement	16.5"
Horizontal Movement	15.5"
Rear Clearance Radius for:	
Vertical Movement	14.75"
Horizontal Movement	14.5"
Maximum Height at Rear with Downward Tilt	53.0"
Maximum Height at Front with Upward Tilt	53.0"
Maximum Downward Tilt From Horizontal	70°
Maximum Upward Tilt From Horizontal	60°
Horizontal Sweep	360°
Lamp	LED Module
Power Requirement	7 Amps 120 volt

Ichip Mystère Optical System Performance At Various Distances

Throw In Feet	Spot Mode			Flood Mode		
	Max Diam.	Min Diam.	Lux	Max Diam.	Min Diam	Lux
15'	18"	4"	42204	32"	6"	17220
25'	30"	6"	16144	54"	8"	5942
30'	36"	8"	11839	60"	9"	4208
50'	56"	12"	4208	96"	16"	1851
75'	90"	20"	1883	186"	24"	645
100'	120"	30"	949	204"	36"	495
125'	150"	36"	607	na	na	na
150'	180"	44"	422	na	na	na